WARING COMMERCIAL®

Italian-Style Panini Grills

WPG150/WPG250/WPG300

Features

- Ribbed cast-iron plates
- Brushed stainless steel body and removable drip tray
- Hinged, auto-balancing top plate to suit foods up to 3″ thick
- Adjustable thermostat to 570°F
- Power & ready indicator lights
- Heat-resistant handles
- Limited One Year Warranty

WPG150/WPG150C

WPG300

WPG250/WPG250C

c UL us NSF

Italian-Style Panini Grills
WPG150/WPG250/WPG300

Specifications

Item	Electrical	Plug-Type	Listings (H" x W" x D")	Dimensions	Warranty
WPG150	120 Volt, 15A	NEMA 5-15P	UL, NSF	9.25" x 11.5" x 15.5"	Limited 1 Year
WPG150C	120 Volt, 15A	NEMA 5-20P	cUL, NSF	9.25" x 11.5" x 15.5"	Limited 1 Year
WPG250	120 Volt, 15A	NEMA 5-15P	UL, NSF	9.5" x 16" x 17.5"	Limited 1 Year
WPG250C	120 Volt, 15A	NEMA 5-20P	cUL, NSF	9.5" x 16" x 17.5"	Limited 1 Year
WPG300	240 Volt, 13A	NEMA 6-20P	UL, cUL, NSF	9.25" x 18.75" x 15.5"	Limited 1 Year

Ordering Information

Description	Catalog #	Std Pkg.	Ship Wt. (Lbs.)	Cubic Feet	UPC Code
Panini Perfetto™ Compact Panini Grill	WPG150	1	44 lbs.	2.4	040072006135
Panini Perfetto™ Compact Panini Grill	WPG150C	1	44 lbs.	2.4	040072009082
Panini Supremo™ Large Panini Grill	WPG250	1	64 lbs.	3.7	040072006128
Panini Supremo™ Large Panini Grill	WPG250C	1	64 lbs.	3.7	040072009105
Panini Ottimo™ Dual Panini Grill	WPG300	1	84 lbs.	3.8	040072006111

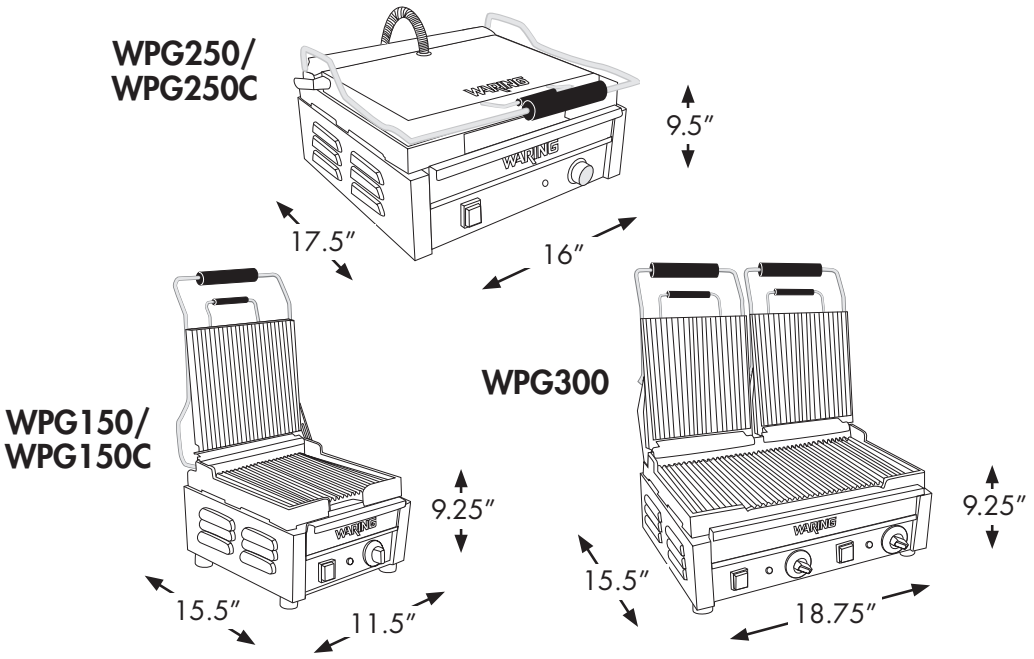

Waring Commercial • 314 Ella T. Grasso Ave. • Torrington • Connecticut 06790
Tel. (800) 492-7464 • Fax (860) 496-9008 • www.waringproducts.com • ©2007

07WC30115
PG-21570